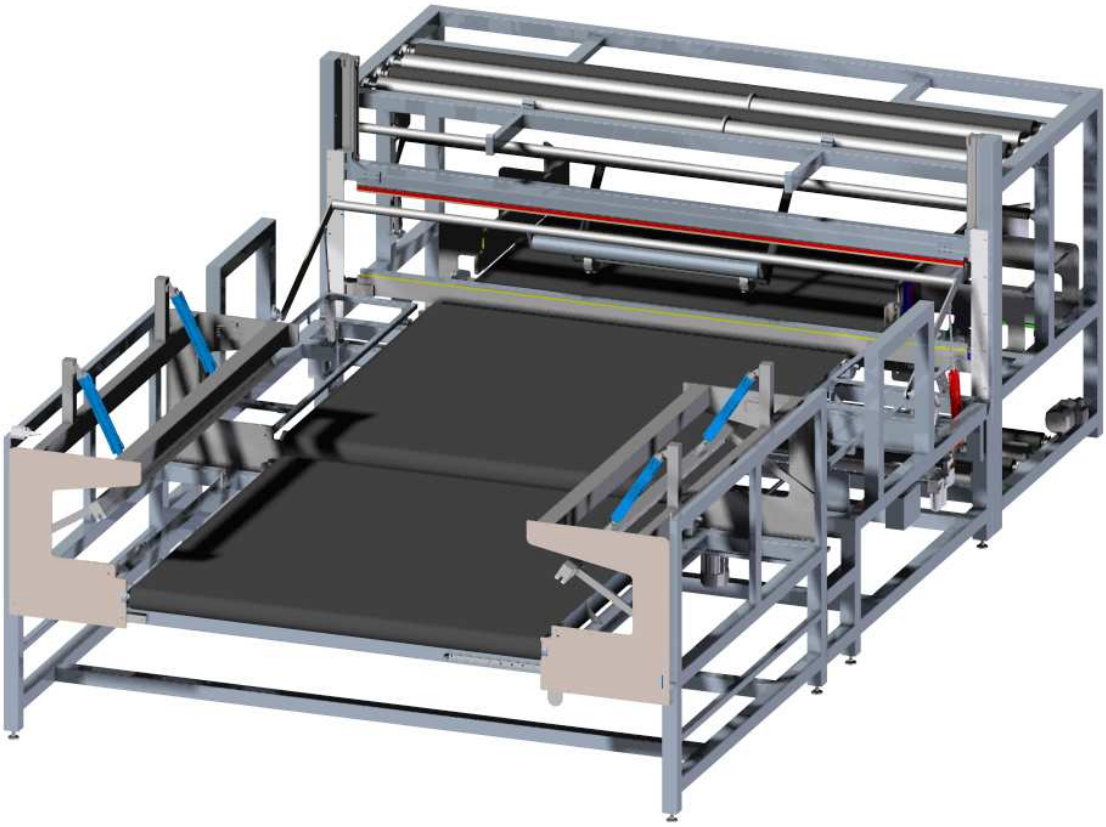

MATTRESSES WRAPPING MACHINE ME 105

INSTALLATION, USER AND MANTENIANCE MANUAL

NOTIFICATION OF CE MARKING

The Manufacturer: MERELLO Ingenieros, S.L.
c/Horcajo 20, nave 23
PINTO – 28320 – MADRID - SPAIN

Declare that the product: mattresses wrapper machine ME-105 s/n 1400

Has been developed in accordance with the European Directive **98/37/CE (22nd June 1.998) and shows compliance with the Normative EN414. EN292, EN1050, EN945, EN418 and EN1088 when used as directed by the appropriate documentation**

Signed: Miguel Merello Arvilla, industrial engineer

Madrid, June 2013

1. GENERAL MACHINE DESCRIPTION

The machine ME 105 wraps automatically every kind of mattresses (springs, latex, foam,…) from polyethylene rolls. The machine provides advance of the mattress trough the film and adjusts itself to the appropriate measures. The finished mattress is ready to be stocked

The machine is compound by the following elements:

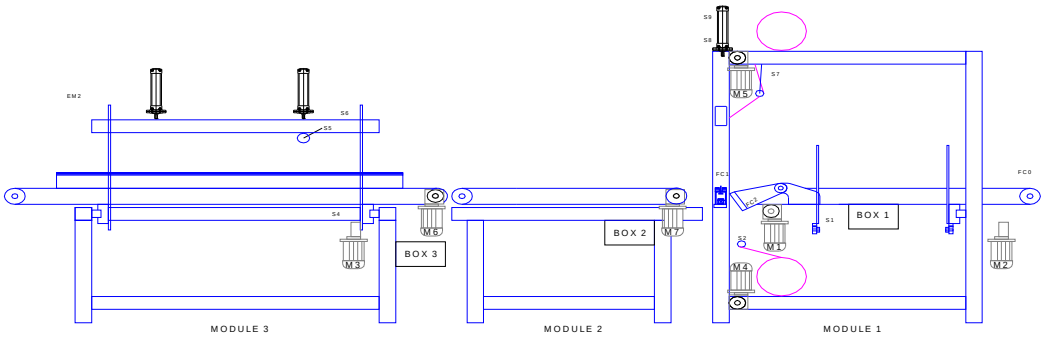

Module nº1: Mattress In-feed: receive the mattress, put it on position for wrapping and measures the length for adjust the corresponding sealing bars distance. The machine detects a new mattress automatically and starts moving the in-feed conveyor. This module contains the upper and lower rolls of film. For sincronice with in-feed lines, Y15 output is ON when the machine is ready

Module nº2: middle sealing: receive the enfold mattress from the previous module, seals all along and separates the bag from the rolls, cutting it by blade

Module nº3: lateral sealing: receive the wrapped mattress from the previous module, seals both sides, cut the waste of film by blade and give the mattress away.

Control cabinet: keeps the electrical and electronic components that provide the control of the machine. A screen allows the man-machine dialogue, input parameters and show error messages.

The position at modules 1, 2 and 3 are measured by contact-free devices that allow the machine to know the exact position at every moment, as well as to move to the rigth position without reset.

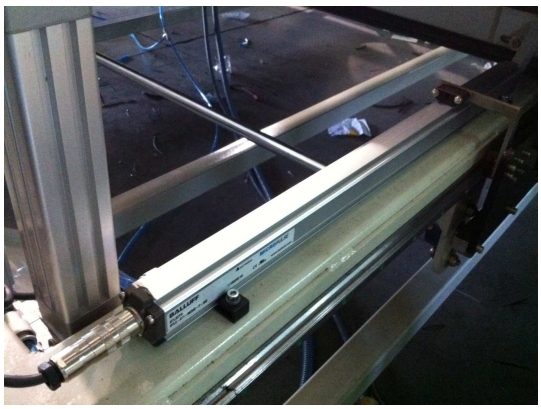

The machine complies with safety requirements of CE as expressed on last chapter

TECHNICAL DATA
AERIAL NOISE: 70 dB(A)
WEIGHT MODULE 1: 1.400 Kg
WEIGHT MODULE 2: 800 Kg
WEIGHT MODULE 1: 1.600 Kg

2. MACHINE INSTALATION

Every element of the machine has its own adjustable legs that allow the installation in any surface

Main job during installation consists on leveling the machine and couple the different modules. For this it is recommendable a burble level

For electrical connections, each module has cables to connect directly to the control cabinet and between them. For more information, see the scheme at the end of the manual

The machine spends about 4 KW (two phases electrical energy 220 VAC) while seals and about 40 l/min. of dry, clean compressed air at 6 bar.

INSTALLATION PROCEDURE

1.- allocate the module nº1 on its final position and level
2.- allocate the module nº2 besides the nº1. Put it to level and align both
3.- bring the module nº3 near the nº2, leaving 1 m of free space between both
4.- connect cables C23 and C32 to box 3, following scheme attached
5.- install the waste ramps
6.- install the sealing bars
7.- move the module nº3 to its final position besides nº2. Put it to level and align both
8.- install the fix and the movable ascending ramps
9.- install the lateral guards
10.- install and plug the EMERGENCY WIRE
11.- connect cables C2 and C3 to the control cabinet, following the schemes attached
12.- put the machine under voltage (220 VAC). Don't forget the frame ground to earth
13.- introduce a mattress and effectuate a complete cycle without film. Verify everything works
14.- put the upper and lower reels of film (see section 3) and make a join between them
15.- introduce a mattress. See section 6 for fine adjustment

- **SYNCHRONIZING WITH PREVIOUS LINES**: the green light (Y42) on the control cabinet lights when the machine is ready to accept a new mattress.
- **SYNCHRONIZING WITH FOLLOWING LINES**: the mattress will not leave the machine if the input signal XB remains ON

3. LOADING OF THE FILM AND STARTING UP

Place a roll of polyethylene (max. 150 Kg.) on the upper pair of rollers and other one on the lower pair, keeping the correct side for welding

> NOTE: some printed rolls will not join by the printed face due to the chemical treatment received.
> The same could occur with re-enforcement rolls for the top or bottom of the mattress, because they will be join for the both faces
>
> If this kind of problem appears, please ask your film provider

For the correct guidance of the film, see the figure attached

The film surface tension depends on the adjustment of the passing trough lever. This adjustment is the same for every kind of mattress and must be carried out with the lightest to be wrapped. In order to give more tension to the final bag, you can operate over the extra advance time on the keyboard (see chapter nº 5)

When change a roll, it is necessary to make a seal along the upper and lower rolls. Pull the film trough the guides (by hand or acting over the plastic lever) and press the key 'CENTRAL SEAL' (see chapter nº 5)

After these adjustments, press the START/STOP button to put the machine ready to work

Please note that the machine will not work while any of the doors stay opened or the emergency stop is pressed. The screen and lights will indicate this situation

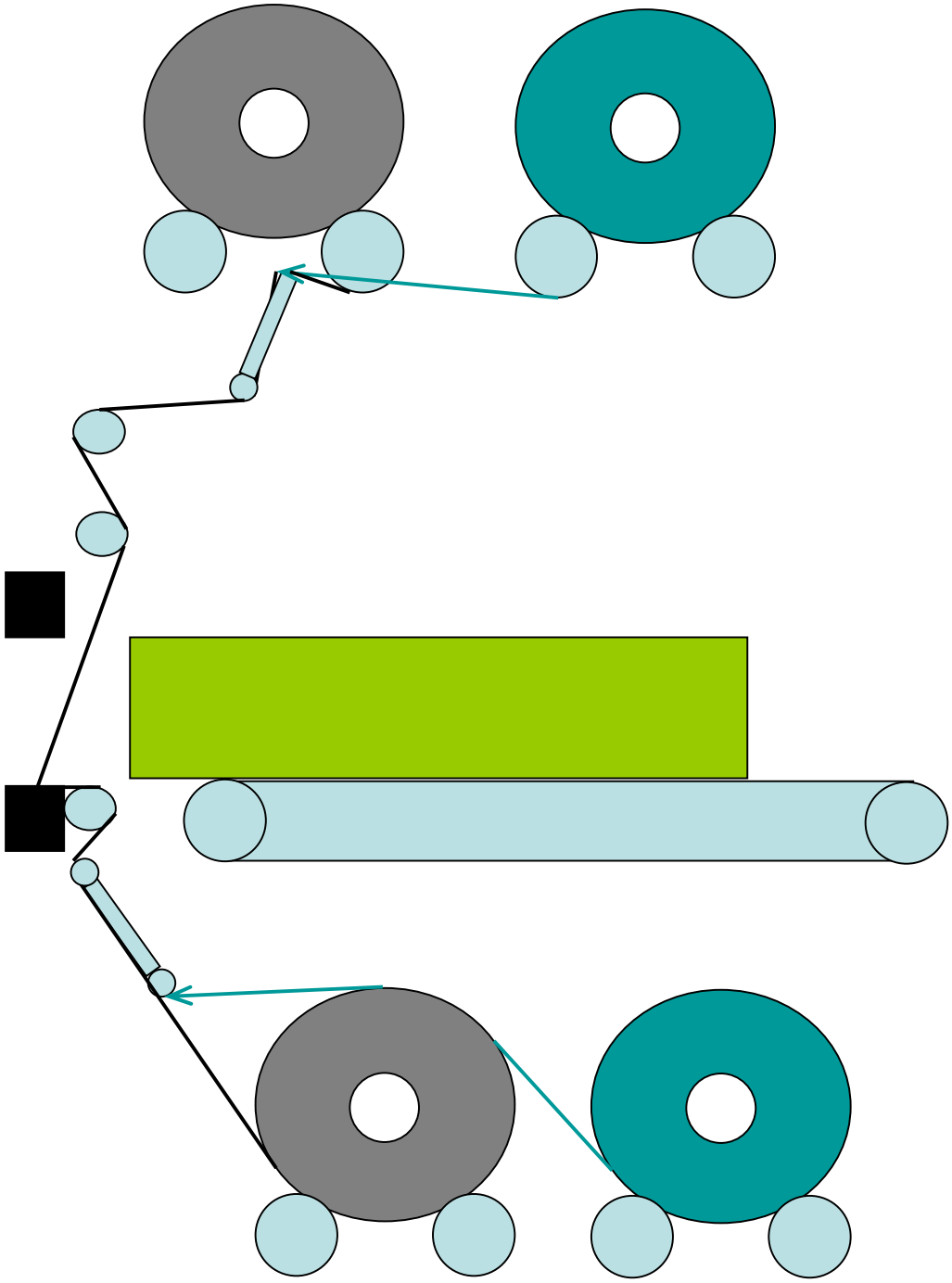

ME-105: PLASTIC FILM INSTALLATION

4. CYCLE OF THE MACHINE

As a safety measure (CE), the machine won't be ready to work after turn it ON until the START/STOP button is pressed. After this, the green light on this button will remain ON and the machine will work while ON (until a new acting over the button will be executed or an alarm will occur).

By pressing the START/STOP button twice, the machine will perform a step by step cycle, which allows analyzing or introducing adjustments

When the machine is turned OFF, it loses any information about the actual cycle. Due to that, after turn it ON you should verify that there are not half wrapped mattresses on any of the modules

The machine can vary between different working modes that can be selected on the screen and act in the following ways:

WITH/OUT PRESS M3: select whether or not the press on the 3rd module is going to work. This press is intended to approach the borders of the mattress and increase the adjustment of the bag

A special input (X 3) is also provided for remote exchange of the press estate, and can be wired from 24Vdc direct to the PLC. When activated, the second Xtra-advance is applied instead of the first and the press is annulated for the mattress being in-feed.

WITH/OUT WHEELS M1: select whether or not the wheels on the 1st module are going to work. The wheels are intended to catch the mattress against the conveyor for assure the advance trough the machine.

WITH/OUT WHEELS M2: idem for second module

BEFORE/LATER ACT. WHEELS M2: select when the wheels on the second module must be deactivated. BEFORE the welding bar means more adjusted bags and less wrinkles. AFTER the welding bar can be necessary with very light mattresses

WITH/OUT SEAL SIDES: select whether or not the up and down sides of the mattress are going to be sealed. Normally they must to be, but in special cases (rolling bags, foam,…) they must to be opened

The machine controls the sealing temperature by software. The program on the machine has a temperature simulator that compensate the accumulative heat when is used a high rates. This value increases proportionally during welding and decreases exponentially the rest of the time. At any time, the heating time programmed is reduced in function of the value of this simulation, avoiding the raise of the temperature on bars

By pressing the EMERGENCY STOP or pulling the EMERGENCY WIRE the energy is removed from the actuators, every movements of the machine are cancelled and the machine status is moved to STOP. After release it, the energy appears again but the machine remain

stopped until START/STOP button is pressed. Then, the cycle will resume to the previous point (first, it's necessary to remove the causes of the problem and realize if the mattress need to be re-introduced. In this case, the best is turn the machine OFF an the ON to start to work from the beginning)

By open any of the doors, every movements of the machine are cancelled and the machine status is moved to STOP. After close it, the machine remain stopped until START/STOP button is pressed. Then, the cycle will resume to the previous point

The meanings of the lights are:

- Green light: the machine will accept a new mattress to wrap
- Yellow light blinking: the machine is working at any point
- Yellow light steady: the machine has been stopped by the green button, in the middle of a cycle
- Red light blinking: emergency stop is pressed or emergency wire is pulled or a door is opened or an alarm has occurred. The screen shows the status
- Red light steady: emergency has been eliminated, but the machine is not working until START/STOP will be press

ADJUSTMENT OF THE MEASUREMENT SYSTEM

Every module on the machine has its own length measurement system, which allows independent movement. By means of this, the new mattress can pass to next module even if the previous has a different length

The measure system has a device that communicates the position to the PLC in analog 0-10VDC values. If any car is out of position, the value will be wrong and the machine won't work, issuing an 'ERROR MEASURES' message

To reset the cars to the right position, go to TEST screen and press AV-AJ button. By this, the 3 cars will move forward, recovering a in range position. The reset the machine to let them find their home

5. MANTENIANCE

EVERY WEEK: remove the waste from the cutting cylinder case in order to avoid damages
EVERY WEEK: check the oil level on the compressed air filter. Refill if necessary
EVERY MONTH: clean the air filter on the control cabinet
EVERY MONTH: test the differential switch, by acting over the TEST button

- CARE OF THE BLADES AND TEFLON COVERS

The blades that cut the film are maintenance free and under normal situations last a lot. When the blade results damaged it's necessary to exchange for a new one. For replace the blade, dismount the cover, untaught and pull carefully the old one and insert the new one

The Teflon covers last between 30.000 and 100.000 processes, depending on the gross of the film and the heat conditions. When they are half used up, silicone sprayed could help to last longer.
For covers substitution, please use self-adhesive 0,15 mm thick Teflon fabric

- REPARATION OF RODLESS CYLINDERS:

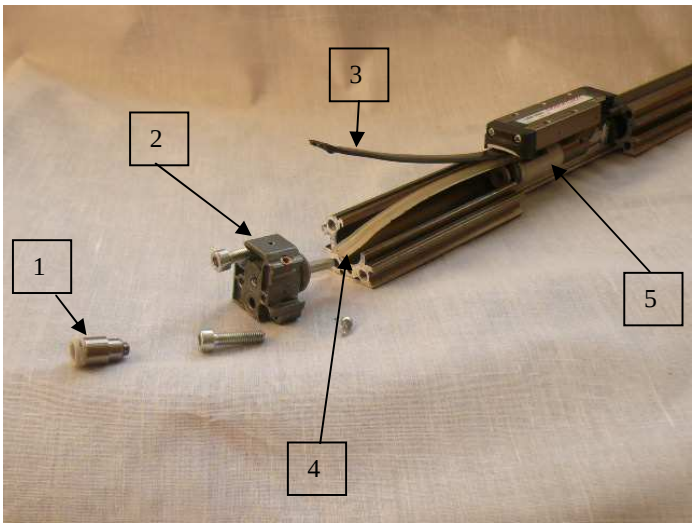

REPAIR KIT
1. air connection
2. end caps
3. out seal strip
4. inner seal strip
5. shuttle

6. FINE ADJUSMENT

Even though the machine has been tried at factory, the final conditions can differ. These are some different adjustment that allow to achieve the most perfect bag

TERMICAL ADJUSTMENT OF THE SEALS

By varying the sealing parameters, the machine can join any kind of film. The criterion depends on the final goal:

- higher speed: ▲power, ▼time heating, ▼time cooling
- less electrical energy, more duration of covers: ▼power, ▲time heating
- more esthetic seals: ▲time cooling
- thicker film: ▼power, ▲time heating, ▲time cooling
- very inelastic film: ▼time cooling, ▲time waiting

ADJUSTMENT OF THE BAG

The final adjustment of the bag to the mattress depends on several points:

- how long the mattress advance over the central seal bar
- how strech is the film during the tie up

The fastest way to change the bag adjustment is by acting on the first point, directly on the keyboard. In the line EXTRA ADVANCE change the value (cents of second that the mattress will advance over the seal bar). Note that a too low value can provoke the mattress to be catch by the bar

The stretch of the film must be between two limits: no too high, because can broke the join at one or both sides, and no too loose, because can present unwinding problems. Note that the stretch is a combination of the position of the lever, the relative speed of the film respect to the advance of the mattress (adjustable by inverter) and the relative speed of the film respect to the bar when moves down. For initial adjustment, keep the speed of the rolls as similar as posible to the advance of mattress (watch the lever angle to stabilizate), and adjust the speed of the arm to the desired stretch

The position of the central seal can be moved by changing one of the film stretch

LONGITUDINAL ADJUSTMENT OF THE BAG

When wrapping mattresses thicker than 10 cm, the press compresses its top and bottom in order to approach the border before sealing, leaving a better adjusted bag.

On depending on the kind of film and mattress, to achieve this could be easier by keeping some distance between the mattress and the sealing bar. This adjustment is made by:

- fix side: move the fix end on the module nº1 in order to approach or separate the mattress
- movable side: change the data on the keyboard called LATERAL ADJUSTMENT (bigger values provoke bigger separation) or move the end-detectors

SPECIAL ADJUSTMENT WHEN USING BOOT SYSTEM

In order to keep the same strenght on every roll, is very recommendable to reduce the rolls speed a little. This way, the coneyor will help for unwinding the rolls, avoiding different speeds
Also, the parameter ‘Time retro roller’ can be increased with the same purpose

7. TOUCH SCREEN

The touch screen is placed on front of the electrical cabinet, and it allows the following functions:

- shows error and status messages
- introduce different working modes
- introduce control parameter
- activate elements of the machine

PASSWORD: to operate other than the main screen, a password will be requested. There are 2 different passwords that give access to 2 different levels:

0000: allows access to the first DATA screen, with frequent used parameters. Value:
1111 or 2222: allows to access to all the screens: DATA, PARAMETER and TEST

The main screen shows the status message. After an alarm occurs, the message line explains the alarm that occurs. The messages are:

- Emergency stop (even after it's been released)
- Door opened (even after it's been closed)
- Inicializing: while moving the machine to the initial position
- Ready: the machine will accept a new mattress
- Working: there is a mattress in-feed
- Stopped: the START/STOP button was pressed and the machine is waiting
- Error on D3/D4: the length detectors D3 or D4 on M1 (when included) have been activated with no cycle. They could be broken or to high sensibility. Check the problem and press START/STOP button to resume
- Error on S3: the movement of the central sealing bar hasn't reach the final position. The reason could be: the bar has catch a mattress, the detector has moved a little down, or the order to move didn't activate the electro valve
- Error on phase 2: the wrap of the mattress exceeds the time limit. After check the problem, move the mattress up to pass the sealing bar (F3 key) and press STAR/STOP button to resume the cycle
- Measurement fail: the measure is out of range. Contact technical service

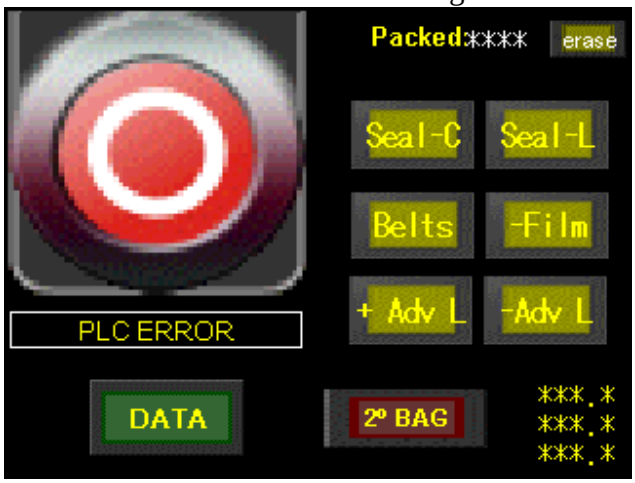

The effect of the function keys is the following (the machine should be in STOP mode):

- Seal C: make a seal on the central bar.
- Seal L: make a seal on the side bars
- Belts: advance of conveyor nº 2 y 3
- -Film: retro of the film rollers
- +Adv L: advance of movable seal bar
- -Adv 2: retro of movable seal bar

The rest of the information on other screens show parameters that can be changed. To change a value, touch it directly. Then a keyboard appears on the screen and let you write the new value (press ENTER for finish). If the value is not between the acceptable ranges, the display will reject it

DATA MENU:

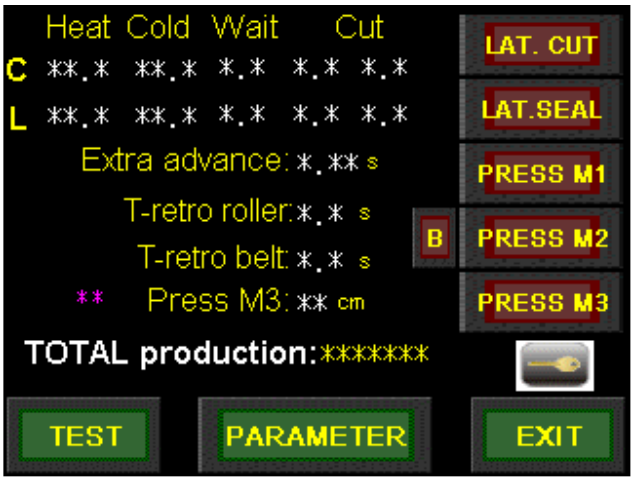

- **ALTERNATE BUTTON LAT.CUT:** when activated, the excess of film on lateral seals is trimmed during the seal cycle

- **ALTERNATE BUTTON LAT.SEAL:** when activated, the seals on the 3rd module (lateral seals) are made on each bag. When deactivated, the mattress leaves the machine directly from the first seal

- **ALTERNATE BUTTON PRESS M1, M2, M3:** when activated, the press on the 3rd module descends to approach the edges of the mattress and increase the adjustment of the bag before sealing. They can also be cancelled by the remote input X3, so

- **ALTERNATE BUTTON bef/aft:** when BEFORE and PRESS M2 are activated, the puller on the 2nd module release before seal, to avoid wrinkles. When AFTER (and PRESS M2) are activated, the wheels keep connected to ensure that the mattress is not catch by the sealing bar.
- **BUTTON PARAMETER:** give access to the parameter menu (see below)

- **T HEAT CENTER**: time in tenth of second during which power is applied to the central

welding bar. This value will be reduced by the temperature compensation system (see below). The amount of power can be regulated in the control cabinet P1. Valor aprox.: 25-50
NOTES:

- The grosser the film is, the higher this value must be
- Too high power values will reduce the Teflon covers life
- Too high values will increase the cycle time

- **T COLD CENTER**: time in tenth of second after heating during which the bar stay down to allow the film to solidify. Aprox.: 10-40

- **T HEAT LATS**: time in tenth of second during which power is applied to the lateral welding bar. This value will be reduced by the temperature compensation system (see below). The amount of power can also be regulated in the control cabinet P2. Valor aprox.: 30-60

- **WAITING CENTER**: time in tenth of seconds that the mattress is waiting for the bar of Module 2 to open. Aprox.: 5-10

- **WAITING SIDES**: time in tenth of seconds that the mattress is waiting for the bars of Module 3 to open. Aprox.: 5-10

- **TIME CUTTER CENTER:** the first value is the time in tenth of seconds that the central cutter will wait to activate (aprox 5). The second, the time during which the blade travel trough the film in the central bar to separate the bag. After this time, the blade will back to its position. Aprox.: 20-30

- **TIME CUTTER S:** the first value is the time in tenth of seconds that the lateral cutter will wait to activate (aprox 5). The second, the time during which the blade travel trough the film in the side bars to separate the rest of film. After this time, the blade will back to its position. Aprox.: 20-30

- **XTRA ADVANCE**: time in cents of second while the mattress stays advancing over the central welding bar after the photocell detects it. A higher value induces bigger advance before soldering, and the bag will be looser. Aprox. values: 0.5-3.0

- **T-RETRO ROLLER**: time in tenths of second while the film rewind the excess of film after the mattress pass over the central welding bar. A low value induces shorter movement before soldering, and the bag will be looser. Aprox. values: 0.0-1.5

- **T-RETRO BELT**: time in tenths of second while the mattress moves backwards after pass over the central welding bar. A low can give an excess of film over the next mattress. Aprox. values: 0.0-1.5

- **PRESS M3:** advance of the press in Module nº3 over the mattress to approach their sides. After this advance, the welding bar descends to make the seal. Aprox.: 7-12

PARAMETER MENU

- **BUTTON UNSTICK**: provokes the machine to make a small movement of the rollers in order to unstuck the film for the next mattress

- **BUTTON STACKER**: provokes the machine to use the output stacker (when available). The button besides will make the machine stop when there is no chart or not

- **BUTTON RAMPS:** when activated, the ramps on the 2nd module ascend before sealing to avoid the film to retract on the mattress advance. Is useful for sticky film

- **BUTTON AUTO/MANUAL**: select between automatic adapt to the measures of the mattress or to continuous feed, ignoring the measures

- **EXIT TIME:** value that the 3rd conveyor moves to make the mattress leave

- **MAX. PRESS M3:** the first value shows the maximum number of teeth that the press will count before activate the seal, even if it is not mattress detected. Is only for sizing purposes, the second number shows the number of teeth already counted, and helps to calculate the first

- **TIME PRESS M1:** time in tenth of seconds during which the wheels over conveyor in Module nº1 push on the mattress to assure the traction. After this time, the wheels up to avoid a shock against the conveyor. Aprox.: 10-20

- **DELAY PRESS M2:** time in tenth of seconds during which the wheels over conveyor in Module nº2 wait to push on the mattress to assure the traction. This permit the mattress to start advance during wrapping. Aprox.: 10-20

- **MINIMUM LENGTH:** maximum advance of the measuring bar in module nº1 to avoid it to shock against the conveyor. The mattress will be wrapped even if is littler than this. Aprox.: 250

- **ADV EXTRA M3:** value added to advance of the mattress to arrive to module 3. A bigger value provokes the mattress to advance more. The right value makes the mattress to stop in the beginning of the module nº3. Aprox.: 0.00-3.00

- **BIGGER-SMALLER:** acceptable error on the position of adjustment respect to the previous module. Aprox: -40, +40

- **BLOWER M1:** is the delay in tenth of seconds for the blowers in M1 to be activated to help removing wrinkles. Aprox.: 0-20

- **BLOWER M3:** time in tenth of seconds during which the blower in M3 is activated to help removing waste. Aprox.: 10-20

- **GAIN F**: value (center and sides) that decreases the simulated temperature while not heating. It is apply each two seconds subtracting a division of the value (Temp/value) from the simulated temperature. Aprox.: 8-15

- **GAIN M**: value (center and sides) that multiply the distance when the adjustment moves to reach the measure on the previous module. Aprox.: 8-15

- **TOTAL PRODUCTION**: shows the number of units processed by the machine from the first day to now.

TEST MENU:

Give access to every output on the PLC, for monitoring and modify (some of them need to put the PLC in STOP mode to be accepted). Useful for maintenance actions

Also allow to change the language of the screen and messages

AV-AJ: provokes the advance of the adjustment, for initial setting

RE-AJ: provokes the return of the adjustment, for initial setting

STACK: provokes a cycle of the stacker (when available)

8. INSTRUCTIONS FOR SAFETY

- The load of the rolls is dangerous and need two or more people
- The doors of the machine should remain closed. When a door is opened, the cycle stops and waits for the START/STOP button
- The machine detects automatically the arrive of a new mattress, and put the conveyor to move so, therefore no objects must be put on it to avoid obstructs and accidents
- The cuts are made by blade which could cause injuries in hands and arms. The operation of exchange must be realized protected with gloves
- The seals are achieved by heating. The wrong use of the bars can cause burn on hands or arms
- The machine is intended for wrapping mattresses. The use for wrapping other kind of things can result in injuries or accidents

9. DEVICES

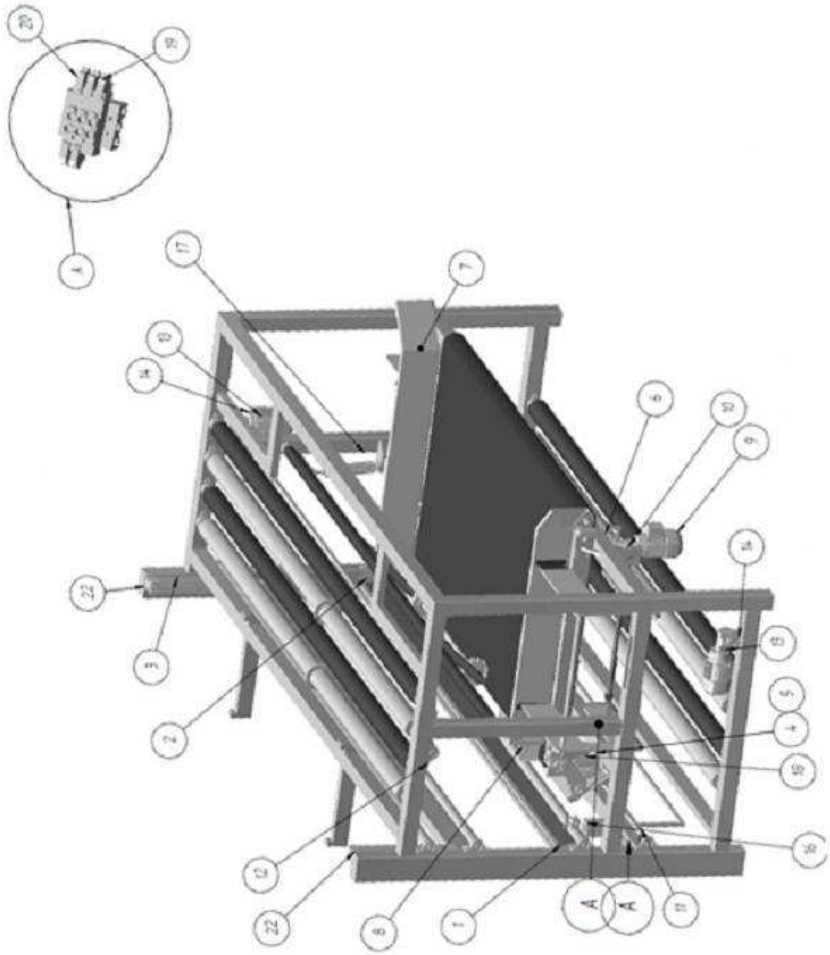

ELECTRICAL F1		
FIGURE	REFERENCIA CLIENTE	DESCRIPTION
1	ME105-SE-1-100	PHOTO CELL
2	ME105-SE-1-101	MIRROR
3	ME105-SE-1-102	INDUCTIVE SENSOR
4	ME105-SE-1-103	CONVEYOR-1 ENGINE
5	ME105-SE-1-104	CONVEYOR-1 GEAR BOX
6	ME105-SE-1-105	POSITION SENSOR
7	ME105-SE-1-106	PHOTO CELL
8	ME105-SE-1-107	INDUCTIVE SENSOR
9	ME105-SE-1-108	CART ENGINE
10	ME105-SE-1-109	CART GEAR BOX
11	ME105-SE-1-110	INDUCTIVE SENSOR
12	ME105-SE-1-111	INDUCTIVE SENSOR DOOR
13	ME105-SE-1-112	PLASTIC ROLL ENGINE
14	ME105-SE-1-113	PLASTIC ROLL GEAR BOX

PNEUMATIC F1		
FIGURE	REFERENCIA CLIENTE	DESCRIPTION
15	ME105-NE-1-100	BAR
16	ME105-NE-1-101	SEAL
17	ME105-NE-1-102	PRESS MATTRESSES
18	ME105-NE-1-103	BARRIER
19	ME105-NE-1-104	VALVE SINGLE
20	ME105-NE-1-105	VALVEL DOBLE

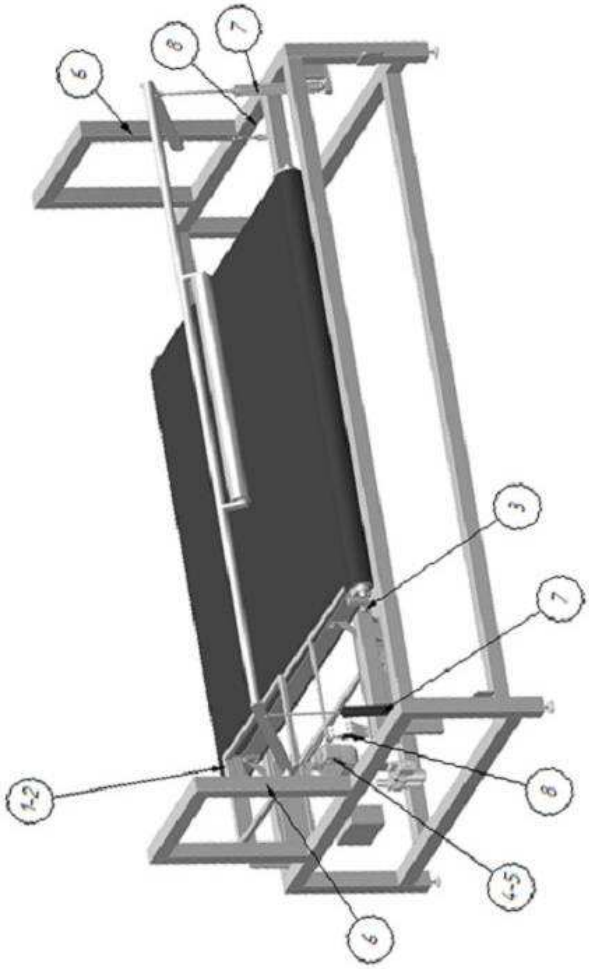

ELECTRICAL F2

FIGURE	REFERENCIA CLIENTE	DESCRIPTION
1	ME105-SE-2-100	CONVEYOR-2 ENGINE
2	ME105-SE-2-101	CONVEYOR-2 GEAR BOX
3	ME105-SE-2-102	POSITION SENSOR
4	ME105-SE-2-103	CART ENGINE
5	ME105-SE-2-104	CART GEAR BOX
6	ME105-SE-2-105	INDUCTIVE SENSOR DOOR

PNEUMATIC F2

FIGURE	REFERENCIA CLIENTE	DESCRIPTION
7	ME105-NE-2-100	PULLER
8	ME105-NE-2-101	RAMP

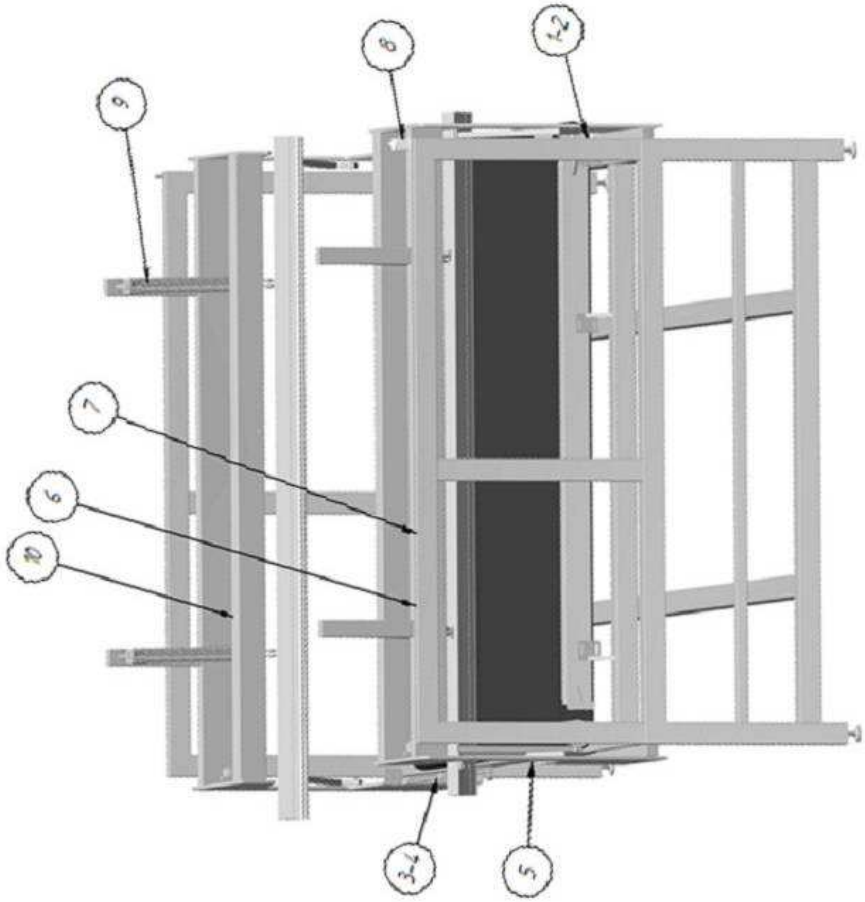

MERELLO INGENIEROS S.L.

ELECTRICAL F3		
FIGURE	REFERENCIA CLIENTE	DESCRIPTION
1	ME105-SE-3-100	CONVEYOR-3 ENGINE
2	ME105-SE-3-101	CONVEYOR-3 GEAR BOX
3	ME105-SE-3-102	CART ENGINE
4	ME105-SE-3-103	CART GEAR BOX
5	ME105-SE-2-102	POSITION SENSOR
6	ME105-SE-3-105	INDUCTIVE SENSOR
7	ME105-SE-3-106	END SWITCH
8	ME105-SE-3-107	SAFETY

PNEUMATIC F3		
FIGURE	REFERENCIA CLIENTE	DESCRIPTION
9	ME105-NE-3-100	PRESS MATTRESSES
10	ME105-NE-3-101	BAR SEAL

9. LIST OF MATERIALS

FASE	Plano	ID	Cant	Descripción
1	1	UCF205	16	Rodamiento tipo brida UCFL 205
1	2	UCP204	2	Rodamiento tipo puente UCP 204
1	3	FC1	1	Emisor fotocélula barrera Telemecanique XUK-2AKSNL2T
1	4	PP1i	2	Puerta policarbonato humo 620x1120x8
1	5	BIS	4	Bisagra puerta polipropileno
1	6	FCBIS	2	Interruptor de seguridad Telemecanique XCSPL591
1	7	FC0	1	Detector fotoeléctrico Telemecanique XUK-5APANL2
1	8	PLACA1	2	Guía de entrada inoxidable
1	9	BANDA1	1	Banda PVC NAB-10ELBV 2250X3115
1	10	UCPA206	4	Rodamiento tipo silleta UCPA 206
1	11	M2	1	Motoreductor Bonfiglioli VF44 P1 20 P71 B14 B3, 0,37KW i=20
1	12	M1,4,5	3	Motoreductor Bonfiglioli VF44 P1 20 P71 B14, 0,37KW i=20
1	13	EV1,2,3	3	Electroválvulas Univer 5/2 1/8 24 VDC G6250
1	14	CIL0	2	Cilindro Univer ISO 32 80 D.M fijación horquilla
1	15	PP1d	1	Puerta policarbonato humo 620x1120x8
1	16	MANI	2	Cierre puerta bisagra ref 5608
1	17	FC1	1	Receptor fotocélula barrera Telemecanique XUK-2APANL2R
1	18	GUB1	1	Guía plástico tubo acero Ø50 x 3050
1	19	RU1R	2	Rueda nylon acanalada Ø200
1	20	D3,D4	2	Placa inoxidable detección medidas con inductivo
1	21	S2,S7	2	Tensor plástico Ø12 con detector inductivo
1	22	RUL	8	Rodillo portabobinas Ø108 x 3050
1	23	FC2	1	Detector fotoeléctrico Telemecanique XUM-5APANL2
1	24	CIL1	1	Cilindro Univer ISO 32 160 D.M fijación horquilla
2	1	PP2d	2	Puerta policarbonato humo 765x880x8
2	2	CIL4	2	Cilindro Univer ISO 40 320 D.M fijación horquilla
2	4	CP21	1	Carcasa protección lado cuchillas
2	7	CP22	1	Carcasa protección lado bornero
2	8	CIL3	2	Cilindro Univer ISO 63 400 D.M fijación horquilla
2	9	CIL6	2	Cilindro Univer ISO 25 50 fijación horquilla
2	10	S3	1	Detector inductivo Univer ISO63
2	11	PP2t	2	Puerta policarbonato humo 865x880x8
2	12	FCBIS	4	Interruptor de seguridad Telemecanique XCSPL591 (XCSPL71)
2	13	M7	1	Motoreductor Bonfiglioli VF44 P1 20 P71 B14 B3, 0,37KW i=20
2	14	ESET	4	Bornero baquelita terminal resistencia
2	15	NICR408	6	ResistenciaNiCr 4x0,8 (1m)
2	16	CELO2010	6	Tira de Celotex ranurada 20x10 (1m)
2	17	NEOP2010	6	Tira de Neopreno autoadhesivo 20x10 (1m)
2	18	BL	1	Cuchilla trapezoidal
2	19	PBL	1	Portacuchillas
2	20	CIL5	1	Cilindro sin vástago Univer Ø16x3050 S1004163050
2	21	BANDA2	1	Banda PVC NSL-10ELAV 2250X3115
2	22	RU2L	2	Rueda nylon Ø200
2	23	UCPA206	4	Rodamiento tipo silleta UCPA 206
2	24	UCFL205	4	Rodamiento tipo brida UCFL 205
3	1	PLACA3F	1	Rampa fija inoxidable
3	2	PRT	2	Plancha poliuretano recoge retales
3	3	BANDA3	1	Banda PVC NSL-10ELAV 2250X4035 (4635 p/EXTRA WIDE)
3	4	PLACA3M	1	Rampa móvil inoxidable

3	5	M3	1	Motoreductor Bonfiglioli VF44 P1 20 P71 B14 B3, 0,37KW i=20
3	6	S4	1	Detector inductivo RESCHNER M12 4mm 30VDC
3	7	LGR15	2	Guía lineal HIWIN LGR15 con patines LGH15
3	8,9	PP3	4	Puerta policarbonato humo 910x880x8
3	10	PM3Z14	4	Engranaje Piñón M3 Z=14
3	11	CP3	2	Carcasa protección lateral lado cuchillas
3	12	CIL11	4	Cilindro Univer ISO 40 400 D.M fijación horquilla
3	13	CIL7	4	Cilindro Univer ISO 40 320 D.M fijación horquilla
3	14	UCPA206	4	Rodamiento tipo silleta UCPA 206
3	15	M6	1	Motoreductor Bonfiglioli VF44 P1 20 P71 B14 B3, 0,37KW i=20
3	16	S5	1	Final de carrera electro mecánico rueda Ø45

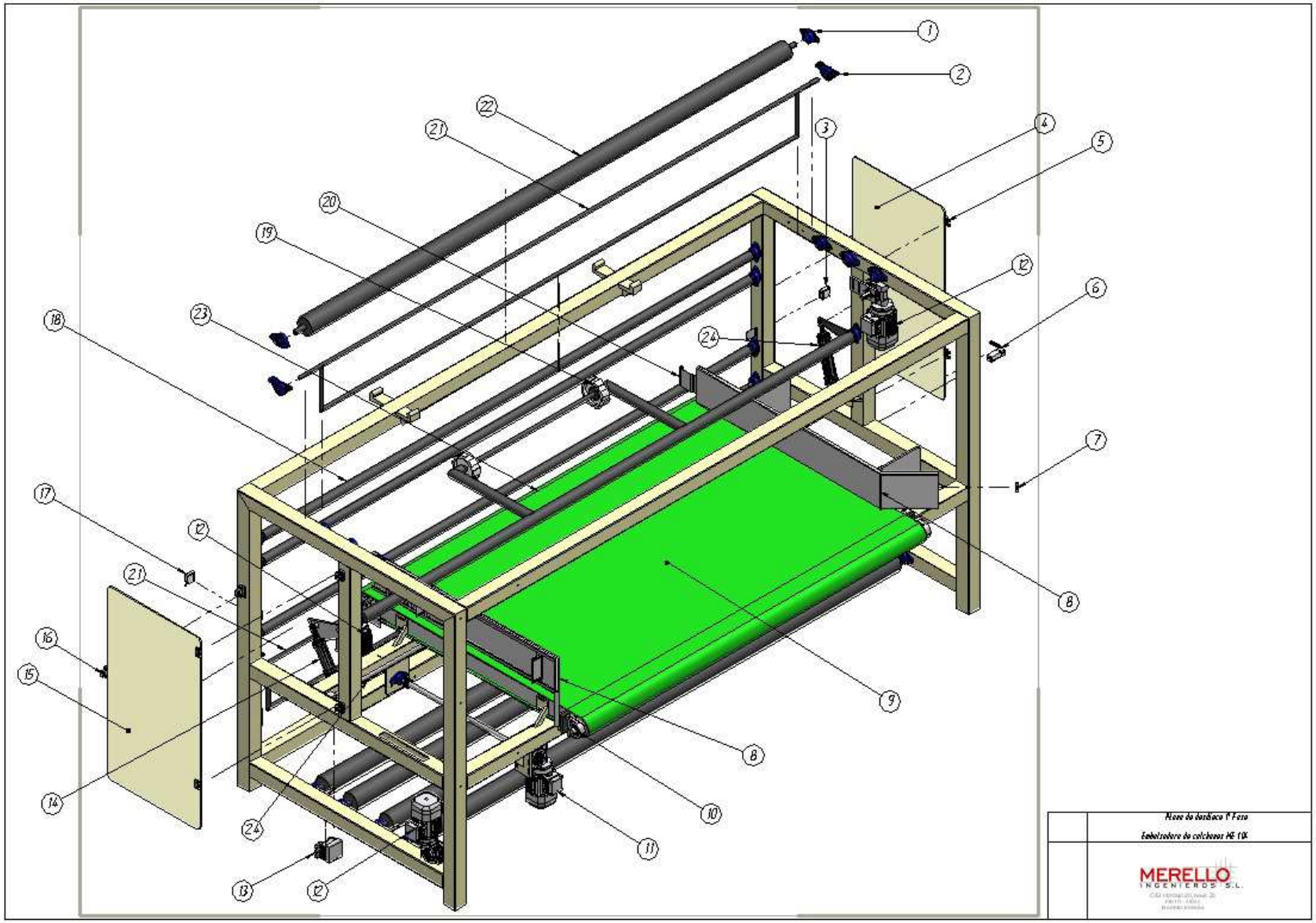
1
2
3
4
5
6
7
8
9
10
11
12
13
14
15
16
17
18
19
20
21
22
23
24
Plano de dosificación 1ª Fase
Embolsadora de colchones ME 104
MERELLO
INGENIEROS S.L.

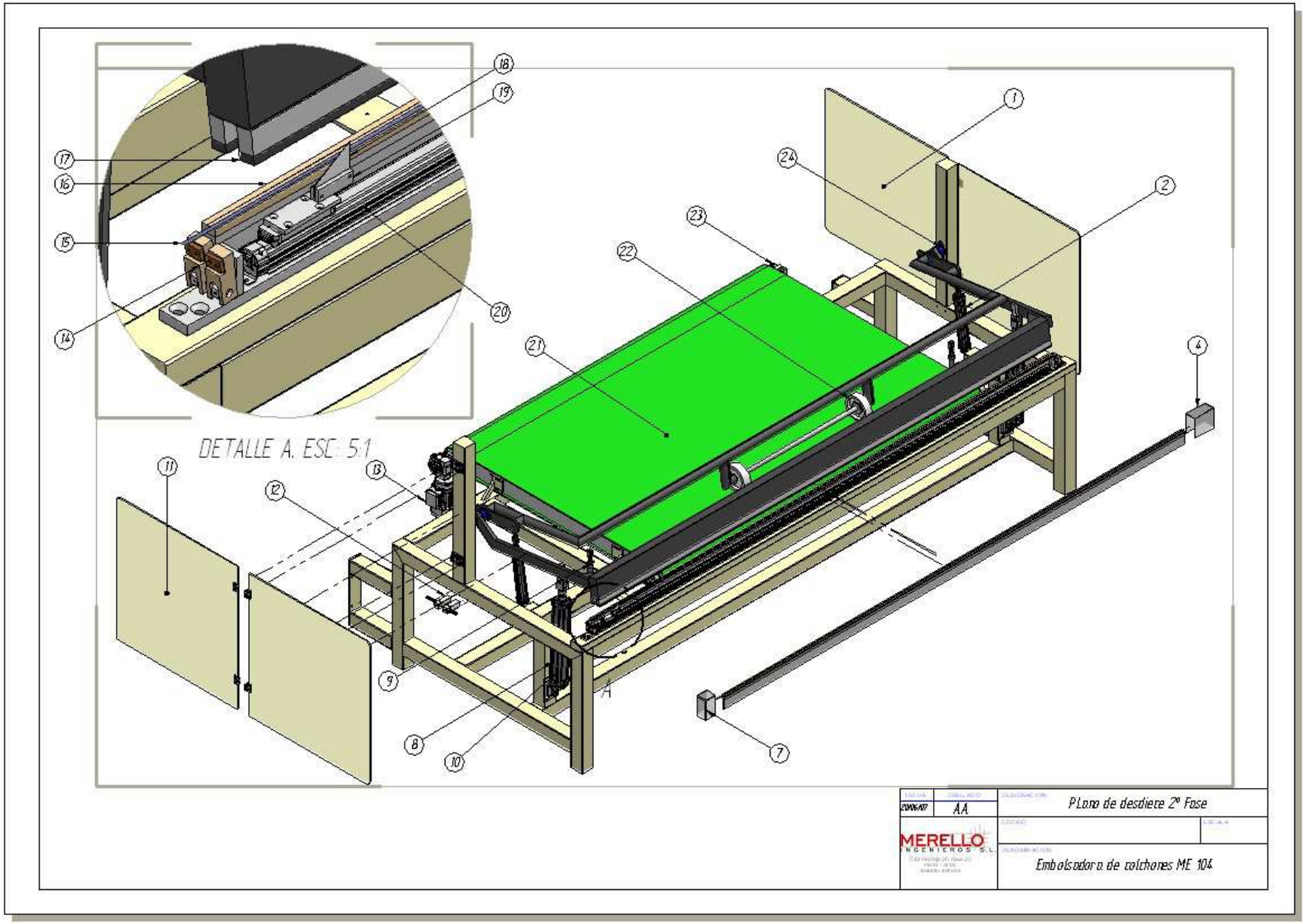
DETALLE A. ESC: 5:1
Plano de desdiete 2ª Fase
AA
MERELLO
INGENIEROS S.L.
Embolsadora de colchones ME 104

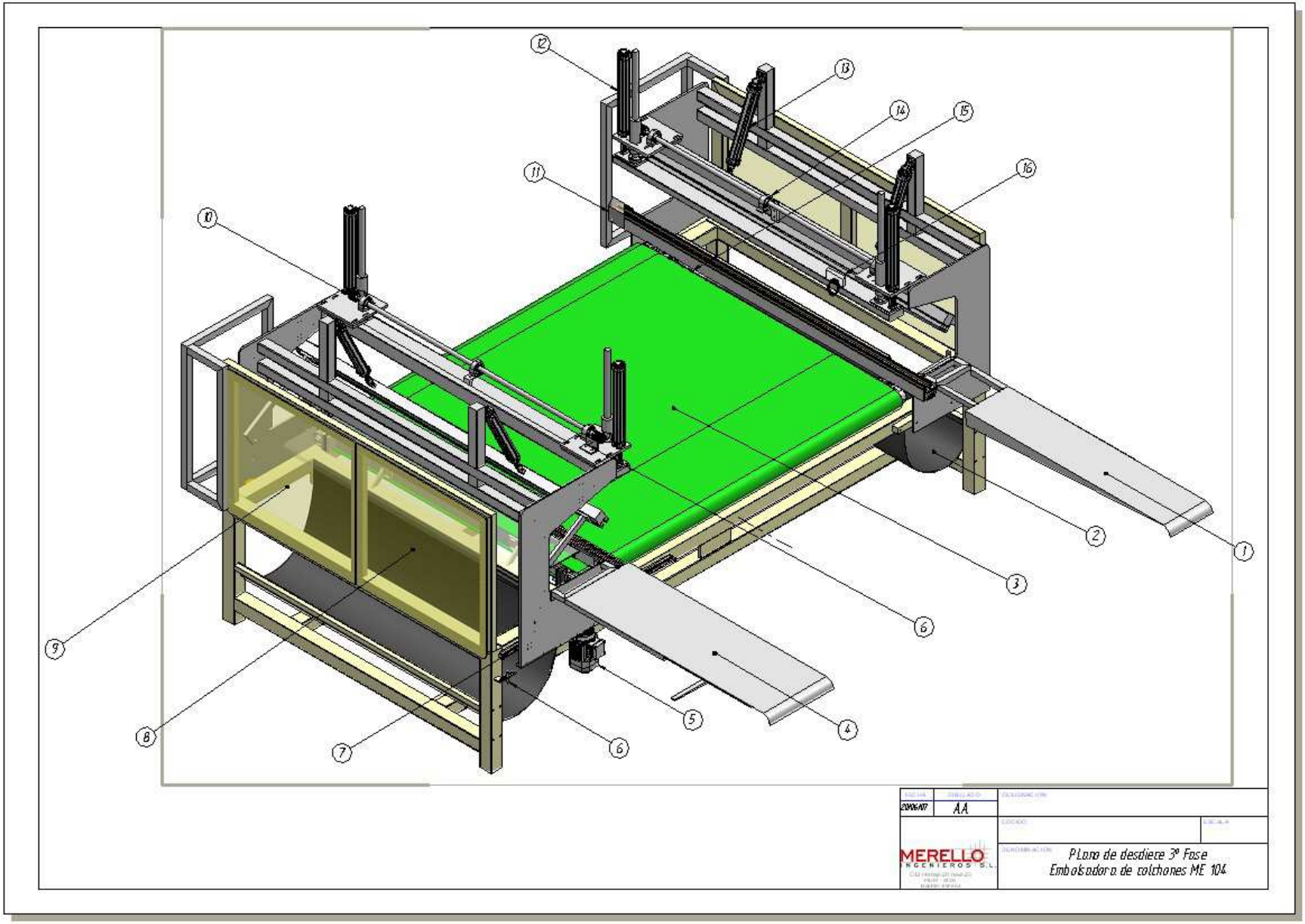
1
2
3
4
5
6
6
7
8
9
10
11
12
13
14
15
16
AA
MERELLO
INGENIEROS S.L.
Plano de desdiete 3ª Fase
Embolsadora de colchones ME 104

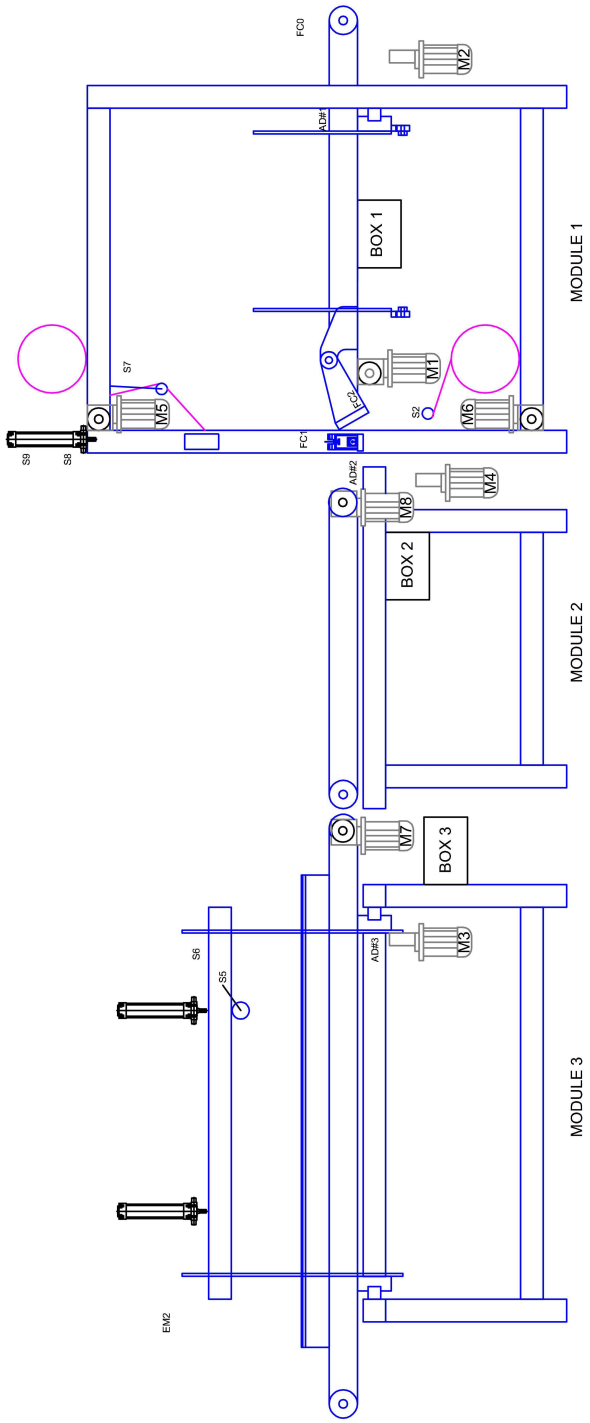

CLIENTE: GLOBAL SYSTEM GROUP	Diseñado por M. Merello	Nombre de archivo Bolsas. AYU	Nº de artículo/Referencia Fecha 27/enero/2009	Escala n/d
MERELLO INGENIEROS S.L.	ME105, MATTRESS WRAPPER MACHINE			
	ELECTRICAL DISTRIBUTION		Edición	Lámina

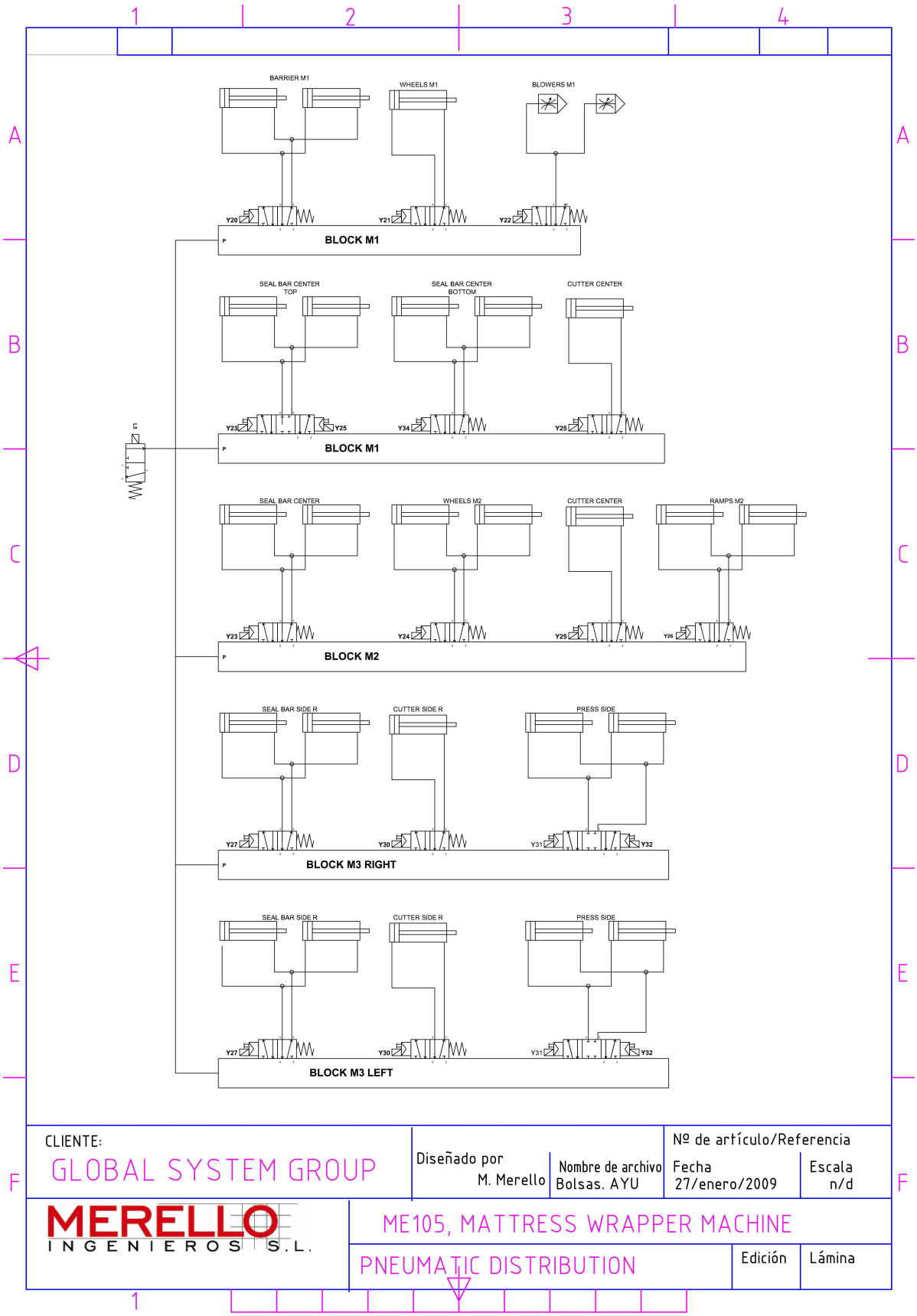
BARRIER M1
WHEELS M1
BLOWERS M1
Y20
Y21
Y22
BLOCK M1
SEAL BAR CENTER TOP
SEAL BAR CENTER BOTTOM
CUTTER CENTER
Y23
Y25
Y34
Y25
BLOCK M1
SEAL BAR CENTER
WHEELS M2
CUTTER CENTER
RAMPS M2
Y23
Y24
Y25
Y26
BLOCK M2
SEAL BAR SIDE R
CUTTER SIDE R
PRESS SIDE
Y27
Y30
Y31
Y32
BLOCK M3 RIGHT
SEAL BAR SIDE R
CUTTER SIDE R
PRESS SIDE
Y27
Y30
Y31
Y32
BLOCK M3 LEFT
CLIENTE:
GLOBAL SYSTEM GROUP
Diseñado por
M. Merello
Nombre de archivo
Bolsas. AYU
Nº de artículo/Referencia
Fecha
27/enero/2009
Escala
n/d
MERELLO
INGENIEROS S.L.
ME105, MATTRESS WRAPPER MACHINE
PNEUMATIC DISTRIBUTION
Edición
Lámina

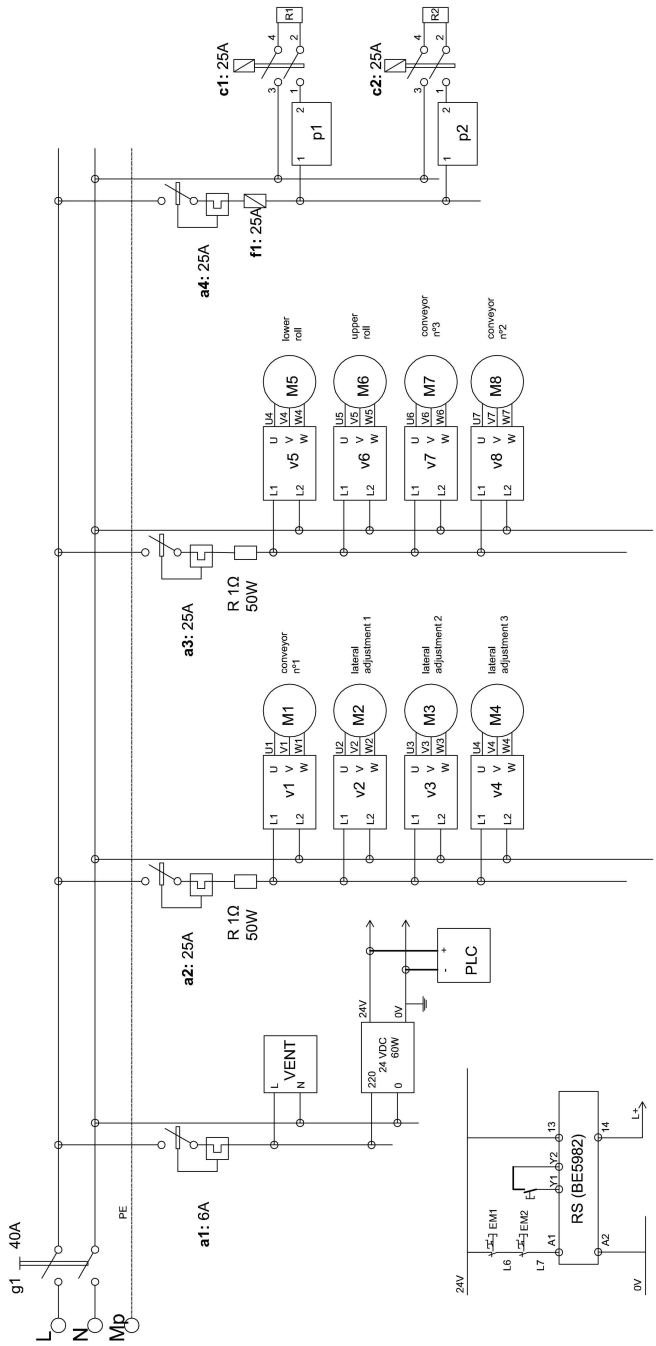

CLIENTE:

GLOBAL SYSTEM GROUP

Diseñado por	Nombre de archivo	Nº de artículo/Referencia	
M. Merello	Bolsas. AYU	Fecha 27/enero/2009	Escala n/d

MERELLO INGENIEROS S.L.

ME105, MATTRESS WRAPPER MACHINE

POWER DISTRIBUTION

Edición	Lámina

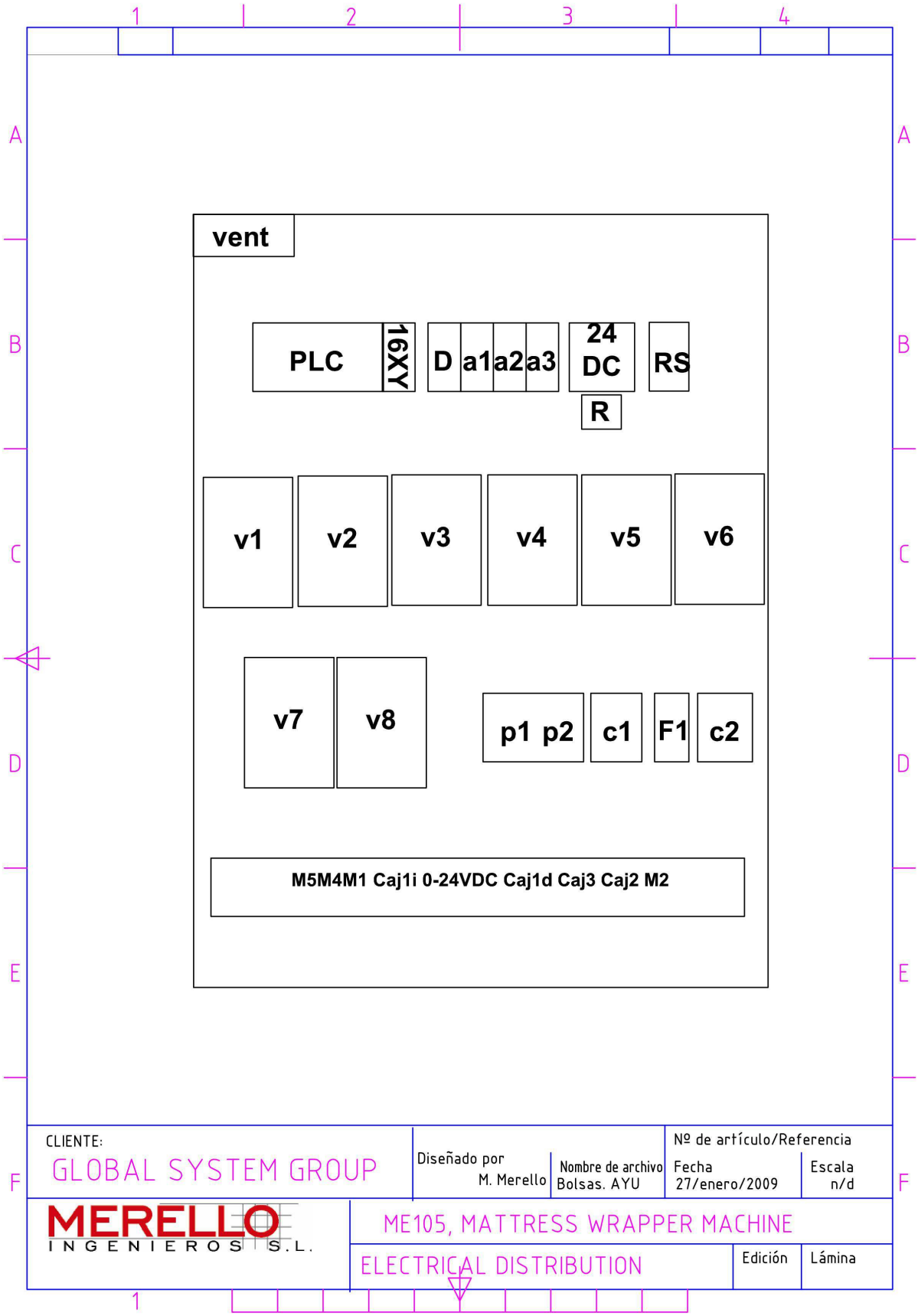
vent
PLC
16XY
D
a1
a2
a3
24 DC
R
RS
v1
v2
v3
v4
v5
v6
v7
v8
p1 p2
c1
F1
c2
M5M4M1 Caj1i 0-24VDC Caj1d Caj3 Caj2 M2
CLIENTE:
GLOBAL SYSTEM GROUP
Diseñado por
M. Merello
Nombre de archivo
Bolsas. AYU
Nº de artículo/Referencia
Fecha
27/enero/2009
Escala
n/d
MERELLO
INGENIEROS S.L.
ME105, MATTRESS WRAPPER MACHINE
ELECTRICAL DISTRIBUTION
Edición
Lámina

LIST OF DE MATERIALS

Referencia	Descripción	Cantidad
a1	Interruptor magneto térmico monofásico 6 A	1
a2,a3	Interruptor magneto térmico monofásico 25 A	1
D	Interruptor diferencial 2p 40A, 30 mA	1
g1	Interruptor general trifásico 2x40 A	1
f1	fusible Φ10, 25A	1
PLC	Autómata programable FP0R C32P	1
16XY	Módulo de salidas FP0R E32	1
c1-c2	Contactor trifásico 24 VDC 25 A	2
p1-p2	Regulador triac 8000 W c/potenciómetro 500 Ohm	2
v1- v7	Variador de frecuencia Mitsubishi FRA520S 0,4 KW	7
m1- m7	Motoreductor trifásico 220VAC 0,4KW, i=20	7
FC0	Fotocélula autoreflexiva 70cm multitensión	1
FC1	Fotocélulas de barrera 5m multitensión	1
FC2	Fotocélula autoreflexiva 30 cm programable	1
D3,D4	Detector inductivo PNP 10-30VDC	2
S3	Detector inductivo SMC PNP 10-30VDC	1
S5	Final carrera con rueda	1
S1,2,4,6,7	Detector inductivo PNP 10-30VDC	4
ev20-32	Electrolválvula neumática 1/8” 5/2 24 VDC	15
vent	Electro ventilador con filtro Φ80 220 VAC 50/60Hz	1
EM1	tirador parada emergencia	1
EM2	pulsador parada emergencia	1
PT1,2	final carrera puerta NO	4
RS	Rele de seguridad 24DC	1

i/o	DESCRIPCION	CABLE	COLOR	CAJA	HILO	2ªCAJA	2ºHILO	COMENTARIOS
ENTRADAS								BLANCO=0V, NEGRO=0V
X0	FCEL NUEVO	C1	marron	caja1-i	3			
X1	PUERTA M1-i	C1	rojo	caja1-i	4			
X2	FCEL TOPE	C1	naranja	caja1-i	5			
X3	SEL CAMA	C1	amarillo	caja1-i	6			
X4	DET AJUSTE-i	C1	verde	caja1-i	7			
X5	DET AJUSTE-d	C1	azul	caja1-d	3			
X6	FCEL CENTRAL	C1	morado	caja1-d	4			
X7	DET BARRA CENTRAL	C1	gris	caja1-d	5			BARRA SOLDAR MEDIO
	MICROPULSO			caja 1-d	6			
X8	DET BOBINA INF	C2	marron	caja1-d	7			
X9	PUERTA M1-d	C2	rojo	caja1-d	8			
XA	libre	C2	naranja					
XB	SALIDA OCUPADA	C2	amarillo	cuadro-S	3			
XC	DET BOBINA SUP	C2	verde	cuadro-S	4			
XD	MARCHA/PARO	C2	azul	cuadro-S	5			
XE	SETA	C2	morado	cuadro-S	6			
XF	libre	C2	gris	cuadro-S	7			
X20	PUERTAS M2	C5	marron	caja3	3	caja2-d	3	
X21	DET RUEDA	C5	rojo	caja3	4			
X22	DET PRENSA	C5	naranja	caja3	5			
X23	CARRO PRESENTE	C5	amarillo	cuadro ST	3			BANNER PROGRAMABLE
X24	APILADOR ARRIBA	C5	verde	cuadro ST	4			INDUCTIVO CILINDRO
X25	COLCHON DENTRO	C5	azul	cuadro ST	5			AUTORREFLECIVA BALLUFF
X27	FOTOCEL M3	C5	gris	caja3	19			FCEL SOBRE BANDA3
SALIDAS								BLANCO=L+, NEGRO=0V
Y0	PWM AJUSTE2	C3	marron	cuadro	V2			
Y1	MESA 1 MARCHA	C3	rojo	cuadro	V6			
Y2	PWM AJUSTE3	C3	naranja	cuadro	V3			
Y3	AJUSTE1 ADEL	C3	amarillo	cuadro	V1			
Y4	AJUSTE1 ATRÁS	C3	verde	cuadro	V1			
Y5	RODIL SUP ADEL	C3	azul	cuadro	V4			
Y6	RODIL SUP ATRÁS	C3	morado	cuadro	V4			
Y7	RODIL INF ADEL	C3	gris	cuadro	V5			
Y8	RODIL INF ATRAS	C4	marron	cuadro	V5			
Y9	MESA 2 MARCHA	C4	rojo	cuadro	V7	caja2	4-5-6	
YA	MESA 2 RAPIDO	C4	naranja	cuadro	V7			
YB	MESA 3 MARCHA	C4	amarillo	cuadro	V8	caja2	7-8-9	termina en caja3, 4-5-6
YC	AJUSTE2 ADEL	C4	verde	cuadro	V2	caja2	1-2-3	
YD	AJUSTE2 ATRÁS	C4	azul	cuadro	V2			
YE	AJUSTE3 ADEL	C4	morado	cuadro	V3	caja2	10-11-12	termina en caja3, 1-2-3
YF	AJUSTE3 ATRAS	C4	gris	cuadro	V3			
Y20	CERRAR BARRERA	C7	marron	caja1-d	9			
Y21	PRENSA M1	C7	rojo	caja1-d	10			
Y22	SOPLADOR M1	C7	naranja	caja1-d	11			
Y23	BAJAR CENTRO	C7	amarillo	caja1-d	12			
Y24	SUBIR CENTRO	C7	verde	caja1-d	13			
Y25	SUBIR CENTRO AB	C7	azul	caja1-d	14			
Y26	CORTAR CENTRO	C7	morado	caja1-d	15			
Y27	MESA2 RETRO	C7	gris	cuadro	V7			
Y28	PRENSA M2	C8	marron	caja3	9	caja2-d	6	
Y29	SUBIR RAMPAS	C8	rojo	caja3	10	caja2-d	7	
Y2A	MOTOR PULLER	C8	naranja	caja3	11			
Y2B	BAJAR LADOS	C8	amarillo	caja3	12			
Y2C	CORTAR LADOS	C8	verde	caja3	13			
Y2D	BAJA PISONES	C8	azul	caja3	14			
Y2E	SUBIR PISONES	C8	morado	caja3	15			
Y2F	SOPLADOR M3	C8	gris	caja3	16			
Y40	APLICAR CALOR C	C9	marron	cuadro	C1			
Y41	APLICAR CALOR L	C9	rojo	cuadro	C2			
Y42	SEMAFORO VERDE	C9	naranja	cuadro-S	8			
Y43	SEMAFORO ROJO	C9	amarillo	cuadro-S	9			
Y44	SUBIR APILADOR	C9	verde	cuadro ST	6			
Y45	ACTIVAR FRENO	C9	azul	cuadro ST	7			
Y46	TOPE COLCHON	C9	morado	cuadro ST	8			
Y47	BAJAR APILADOR	C9	gris	cuadro ST	9			

MAIN CABINET LOWER

input name	X0	X1	X2		X4	0V	0V	0V	24V	24V	24V	X5	X6	X7	X10	X11	Y20	Y21	Y22	Y23	Y24	Y25	Y26
conection nº	3	4	5	6	7							3	4	5	6	7	8	9	10	11	12	13	14
wire nº	3	4	5	6	7	1	1	1	2	2	2	3	4	5	6	7	8	9	10	11	12	13	14
cable name	C1i	C1i	C1i	C1i	C1i	C1i	C1d	C3	C1i	C1d	C3	C1d	C1d	C1d	C1d	C1d	C1d	C1d	C1d	C1d	C1d	C1d	C1d

STACKER

output	0V	24V	X30	X31	X32	Y40	Y41	Y42
conection nº	1	2	3	4	5	6	7	7
output name	0V	24V	CP	MS	SU	AS	AB	HS

X20		X22	X23	X24	L6	L7	L+	Y27	Y30	Y31	Y32	Y33	Y34	Y35	U3	V3	W3	U6	V6	W6	U7	V7	W7	R11	R12	R21	R22
3	4	5	6	7	8	9	10	11	12	13	14	15	16	17	1	2	3	4	5	6	7	8	9	10	11	12	13
3	4	5	6	7	8	9	10	11	12	13	14	15	16	17	1	2	3	4	5	6	7	8	9	10	11	12	13
C3	C3	C3	C3	C3	C3	C3	C3	C3	C3	C3	C3	C3	C3	C3	C2	C2	C2	C2	C2	C2	C2	C2	C2	C2	C2	C2	C2

BOX 1d

input cable							C1d							
wire nº	1	2	3	4	5	6	7	8	9	10	11	12	13	14
conection nº	1	2	3	4	5	6	7	8	9	10	11	12	13	14
output name	0V	24V	D4	FC1	S1	S2	P1D	EV1	EV2	EV3	EV4	EV4	EV5	EV6

BOX 1i

input cable			C1i			
wire nº	1	2	3	4	5	6
conection nº	1	2	3	4	5	6
output name	0V	24V	FC0	P1i	FC2	D3

BOX 2

input cable	C2												
output name	U3	V3	W3	U6	V6	W6	U7	V7	W7	R11	R12	R21	R22
wire nº	1	2	3	4	5	6	7	8	9	10	11	12	13
conection nº	1	2	3	4	5	6	7	8	9	10	11	12	13
cable C23	1	2	3	4	5	6						7	8

BOX 2i

input cable	C32					
output name	0V	24V	PT2	L+	EV1	EV2
wire nº	1	2	3	4	5	6
conection nº	1	2	3	4	5	6

BOX 3d

input cable	C33 d					
wire nº	1	2	3	4	5	6
conetion nº						
output name	0V	Y27	Y30	Y31	Y32	Y33

BOX 3

input cable	C3																	C23								
output name	0V	24V	PT2		S4	S5	S6	L6	L7	L+	EV1	EV2	EV1	EV2	EV3	EV3	EV4	U3	V3	W3	U6	V6	W6	R21		R22
wire nº	1	2	3	4	5	6	7	8	9	10	11	12	13	14	15	16	17	1	2	3	4	5	6	7		8
terminal nº	1	2	3	4	5	6	7	8	9	10	11	12	13	14	15	16	17	18	19	20	21	22	23	24	25	26
output C32	1	2	3							4	5	6														
output C33d	1												2	3	4	5	6									
output C33i	1	11				9	10	7	8				2	3	4	5	6									

BOX 3i

input cable	C33 i										
wire nº	1	11	2	3	4	5	6	7	8	9	10
conection nº	1	11	2	3	4	5	6	7	8	9	10
output name	0V	24V	EV1	EV2	EV3	EV3	EV4	S6	L6	L7	S5

VARIADOR OMROM JX

		F02	F03	A01	A02	A04	A20	A21	B83	C3
		Acelerac.	Decelerac.	Referencia velocidad	Mando digital	Frecuencia maxima	Velocidad V0	Velocidad V1	Frecuencia portadora	terminal3
V1	Adjust 1	0.25	0.05	01	01	50	50	-	12	
V2	Adjust 2	0.25	0.05	01	01	50	50	-	12	
V3	Adjust 3	0.25	0.05	01	01	50	50	-	12	
V4	Upper roll	0.40	0.20	02	01	100	45	-	12	
V5	Lower roll	0.40	0.20	02	01	100	45	-	12	
V6	Conveyor1	0.40	0.40	02	01	50	25	-	12	
V7	Conveyor3	0.40	0.40	02	01	100	70	-	12	
V8	Conveyor2	0.40	0.40	02	01	100	25	70	12	02

VARIADOR PANASONIC VF0

		P01	P02	P03	P08	P09	P15	Fr	P32	P22	P24	P64
		Acc.	Decc.	F-range	Control	Ref-V	Freq.max	Vel-V0	Vel-V1	PWM	PWM T	Carrier
V1	Adjust 1	00.2	00.1	-	5	1	-	50	-	-	-	10
V2	Adjust 2	00.2	00.1	-	5	1	-	50	-	1	10.0	10
V3	Adjust 3	00.2	00.1	-	5	1	-	50	-	1	10.0	10
V4	Upper roll	00.4	00.2	-	5	1	-	45	-	-	-	10
V5	Lower roll	00.4	00.2	-	5	1	-	45	-	-	-	10
V6	Conveyor1	00.4	00.4	FF	5	1	100	50	-	-	-	10
V7	Conveyor2	00.4	00.4	FF	5	1	100	25	75	-	-	10
V8	Conveyor3	00.4	00.4	FF	5	1	100	75	-	-	-	10

WORLD-BEAM® QS18E Series

Light SET

- Sets a threshold approximately 12.5% below the presented sensing condition (see Figure 5).
- Any condition darker than the threshold causes the output to change state.
- In Light-Operate mode, the presented condition is the Output ON condition. In Dark-Operate mode, the presented condition is the Output OFF condition. To change the Light-/Dark-Operate setting, see page 5.
- Recommended for applications where only one condition is known, for example a stable light background with varying darker targets, or in retroreflective applications.

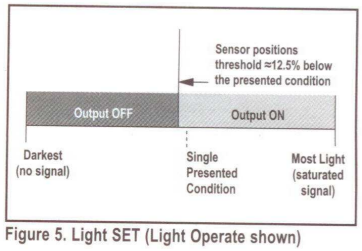

Figure 5. Light SET (Light Operate shown)

	Push Button 0.04 seconds ≤ "Click" ≤ 0.8 seconds	Remote Line 0.04 seconds ≤ T ≤ 0.8 seconds	Result	
Access Light SET Mode	• Press and hold push button 2–4 seconds.	• Single-pulse remote line.	Sensor waits for sensing condition.	
			Push Button **Power LED:** OFF **Output LED:** Slow flash (1 Hz)	**Remote Line** **Power LED:** OFF **Output LED:** Double-flash
Set Sensing Condition	• Present sensing condition. • Four-click push button.	• Present sensing condition. • Four-pulse remote line.	Accepted	**Power LED:** Flashes 3x, then ON Green **Output LED:** OFF,* then ON or OFF, depending on output state Sensor returns to RUN mode with new settings.
			Not Accepted	**Power LED:** OFF **Output LED:** Slow flash (1 Hz) Sensor returns to wait state, ready for sensing condition.

Dark SET

- Sets a threshold approximately 12.5% above the presented sensing condition (see Figure 6).
- Any condition lighter than the threshold causes the output to change state.
- In Light-Operate mode, the presented condition is the Output OFF condition. In Dark-Operate mode, the presented condition is the Output ON condition. To change the Light-/Dark-Operate setting, see page 5.
- Recommended for applications where only one condition is known, for example a stable dark background with varying lighter targets, or when maximum excess gain is required.

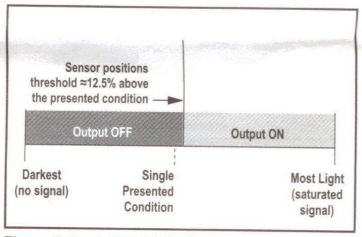

Figure 6. Dark SET (Light Operate shown)

	Push Button 0.04 seconds ≤ "Click" ≤ 0.8 seconds	Remote Line 0.04 seconds ≤ T ≤ 0.8 seconds	Result	
Access Dark SET Mode	• Press and hold push button 2–4 seconds.	• Single-pulse remote line.	Sensor waits for sensing condition.	
			Push Button **Power LED:** OFF **Output LED:** Slow flash (1 Hz)	**Remote Line** **Power LED:** OFF **Output LED:** Double-flash
Set Sensing Condition	• Present sensing condition. • Five-click push button.	• Present sensing condition. • Five-pulse remote line.	Accepted	**Power LED:** Flashes 3x, then ON Green **Output LED:** OFF,* then ON or OFF, depending on output state Sensor returns to RUN mode with new settings.
			Not Accepted	**Power LED:** OFF **Output LED:** Slow flash (1 Hz) Sensor returns to wait state, ready for sensing condition.

* Initial Output LED condition is simultaneous with Power LED 3-flash.

Banner Engineering Corp. • Minneapolis, MN U.S.A.
www.bannerengineering.com • Tel: 763.544.3164

BONFIGLIOLI RIDUTTORI

LISTA PARTI DI RICAMBIO, LUBRIFICAZIONE, INSTALLAZIONE, MANUTENZIONE
SPARE PARTS LIST, LUBRICATION, INSTALLATION, MAINTENANCE
LISTE DES PIECES DETACHEES, LUBRIFICATION,INSTALLATION, ENTRETIEN
ERSATZTEILLISTE, SCHMIERUNG, EINBAUVORSCHRIFT, WARTUNG
PIEZAS DE RECAMBIO, LUBRIFICACION, INSTALACION, MANTENIMIENTO

VF - RVF - VF/VF

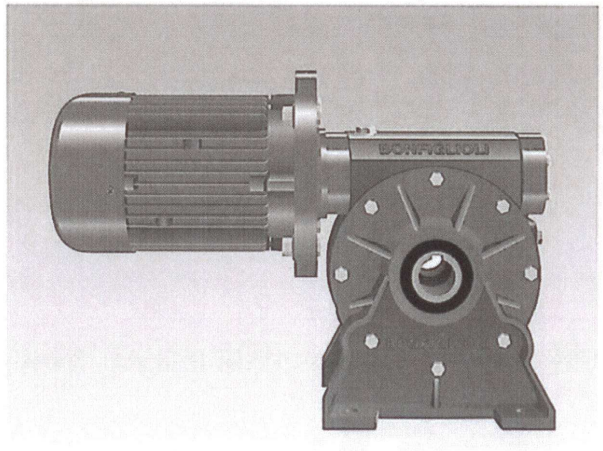

Gruppo Bonfiglioli

BONFIGLIOLI RIDUTTORI

VF
27 ÷ 62

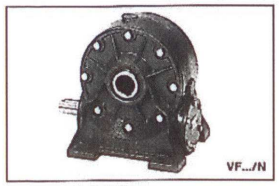

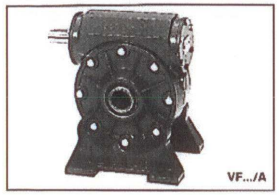

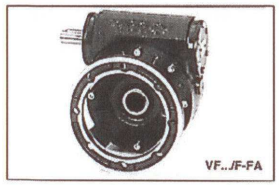

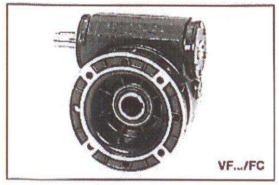

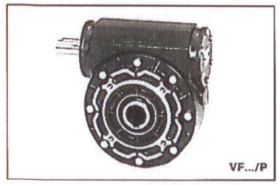

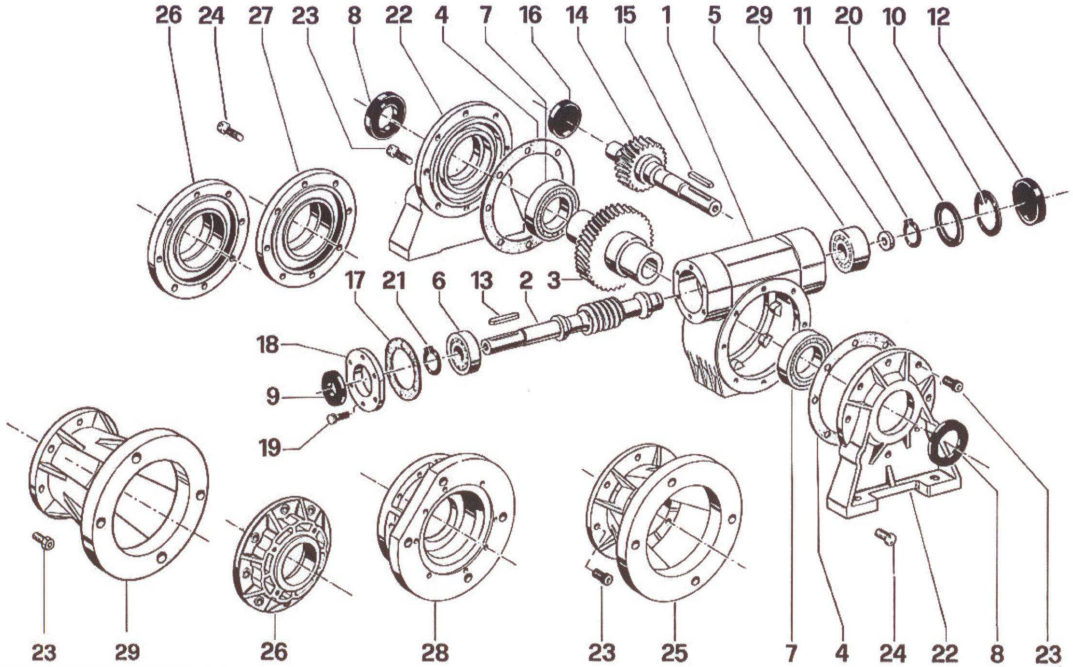

Cuscinetti *Bearings* Roulements *Kugellager* Rodamientos	VF...				
	27	30	44	49	62
5	608 8/22/7	6200 10/30/9	6301 12/37/12	6303 17/47/14	BAQB631418 20/52/15
6	608 8/22/7	6200 10/30/9	6202 15/35/11	6004 20/42/12	6304 ETN9 20/52/15
7	6000 10/26/8	16005 25/47/8	6006 30/55/13	16008 40/68/9	6008 40/68/15

Anelli di tenuta *Oilseals* Joint d'étanchéité *Simmerringe* Retén	VF...				
	27	30	44	49	62
8	10/19/7	25/40/7	30/40/7	40/55/7	40/55/7
9	8/16/7	10/30/7	15/35/7	20/42/7	20/52/10

Versioni	VF...	N.	Denominazione	*Denomination*	Dénomination	*Benennung*	Denominación
N-A-P-F FC	27-30-44-49-62	1	Cassa	*Case*	Carter	*Getriebegehäuse*	Caja
		2	Guarnizione cassa	*Gasket*	Joint	*Dechtung*	Junta
		5	Cuscinetto	*Bearing*	Roulement	*Kugellager*	Rodamiento
		6	Cuscinetto	*Bearing*	Roulement	*Kugellager*	Rodamiento
		7	Cuscinetto	*Bearing*	Roulement	*Kugellager*	Rodamiento
		8	Anello tenuta	*Oilseal*	Joint d'étanchéité	*Simmerring*	Retén
		9	Anello tenuta	*Oilseal*	Joint d'étanchéité	*Simmerring*	Retén
		10	Seeger Ø i	*Circlip Ø i*	Seeger Ø i	*Seeger Ø i*	Seeger Ø i
		12	Cappellotto in gomma	*Rubber cap*	Capuchon en caoutchouc	*Gummideckel*	Sombrerete de caucho
		13	Linguetta	*Key*	Clavette	*Einlegekeil*	Chaveta
	30-44-49-62	2	Vite senza fine	*Wormshaft*	Vis sans fin	*Schnecke*	Vis sin fin
		3	Corona elicoidale	*Wormwheel*	Couronne	*Schneckenrad*	Corona
		29	Ralla	*Spacer ring*	Entretoise	*Lagerschale*	Distanciador
		11	Seeger Ø e	*Circlip Ø e*	Seeger Ø e	*Seeger Ø e*	Seeger Ø e
	27	14	Corona elicoidale	*Wormwheel*	Couronne	*Schneckenrad*	Corona
		15	Linguetta	*Key*	Clavette	*Einlegekeil*	Chaveta
		16	Cappellotto in gomma	*Rubber cap*	Capuchon en caoutchouc	*Gummideckel*	Sombrerete de caucho
		17	Guarnizione cappellotto	*Gasket*	Joint	*Dichtung*	Junta
		18	Cappell. di chiusura per anello	*Cap*	Capouchon de fermeture	*Abschlußdeckel*	Sombrerete portaréten
		19	Vite a testa esagonale	*Hexagonal head screw*	Vis de fixation	*Schraube*	Tornillo hexagonal
	62	20	Ralla	*Spacer ring*	Entretoise	*Lagerschale*	Distanciador
		21	Seeger Ø e	*Circlip Ø e*	Seeger Ø e	*Seeger Ø e*	Seeger Ø e
N-A	27-30-44-49-62	22	Coperchio con piedi	*Foot cover*	Couvercle pied	*Deckel mit Füße*	Tapa con piés
	30-44-49	23	Vite a testa cava esagonale	*Socket head screw*	Vis de fixation	*Schraube*	Tornillo hexagonal
	27-62	24	Vite a testa esagonale	*Hexagonal head screw*	Vis de fixation	*Schraube*	Tornillo hexagonal
F	27-30-44-49-62	25	Coperchio con flangia	*Flange cover*	Couvercle-bride	*Flanschdeckel*	Tapa con brida
		23	Vite a testa cava esagonale	*Socket head screw*	Vis de fixation	*Schraube*	Tornillo hexagonal
	30-44-49	26	Coperchio pendolare	*P Cover*	Couvercle P	*P Deckel*	Tapa P
	27-62	27	Coperchio di chiusura	*Plain cover*	Couvercle	*Deckel*	Tapa
		24	Vite a testa esagonale	*Hexagonal head screw*	Vis de fixation	*Schraube*	Tornillo hexagonal
FC	62	28	Coperchio con flangia corta	*FC Cover*	Couvercle avec bride FC	*FC deckel*	Tapa con brida corta
		23	Vite a testa cava esagonale	*Socket head screw*	Vis de fixation	*Schraube*	Tornillo hexagonal
		27	Coperchio di chiusura	*Plain cover*	Couvercle	*Deckel*	Tapa
		24	Vite a testa esagonale	*Hexagonal head screw*	Vis de fixation	*Schraube*	Tornillo hexagonal
P	30-44-49-62	26	Coperchio pendolare	*P Cover*	Couvercle P	*P Deckel*	Tapa P
	30-44-49	23	Vite a testa cava esagonale	*Socket head screw*	Vis de fixation	*Schraube*	Tornillo hexagonal
	62	24	Vite a testa esagonale	*Hexagonal head screw*	Vis de fixation	*Schraube*	Tornillo hexagonal
FA	44-49	29	Coperchio con flangia FA	*FA cover*	Couvercle avec bride FA	*FA deckel*	Tapa con brida FA

Il Gruppo Bonfiglioli, sensibile ai problemi dell'ambiente e all'ecologia, ha realizzato le pagine di questo catalogo in carta riciclata.

Bonfiglioli Group, in its commitment to environmental preservation, have printed these pages on recycled paper.

Le Groupe Bonfiglioli, sensible aux problèmes de préservation de l'environment, a imprimé ce catalogue sur du papier recyclé.

Die Gruppe Bonfiglioli denkt umweltbewußt: Vorliegender Katalog ist auf Altpapier gedruckt.

El Grupo Bonfiglioli, atento a los problemas del ambiente y a la ecología, ha realizado las páginas de este catálogo en papel reciclado.